Assembly Instructions

122cm x 60cm x 60cm / 4ft Reptile Terrarium

Product Code : V0145



Parts

Base x 1
Frame Uprights x 4
Back Panel x 1
Side Panels x 2
Mesh Top x 1
Glass Doors x 2
Handles x 2
Cable Outlet rims x 2

Hardware

M6x16 Screws x 8
M4 x Screws x 4
Tool

Step 1: Attach the four frame uprights into the base using the M6x16 screws and tool then tighten.

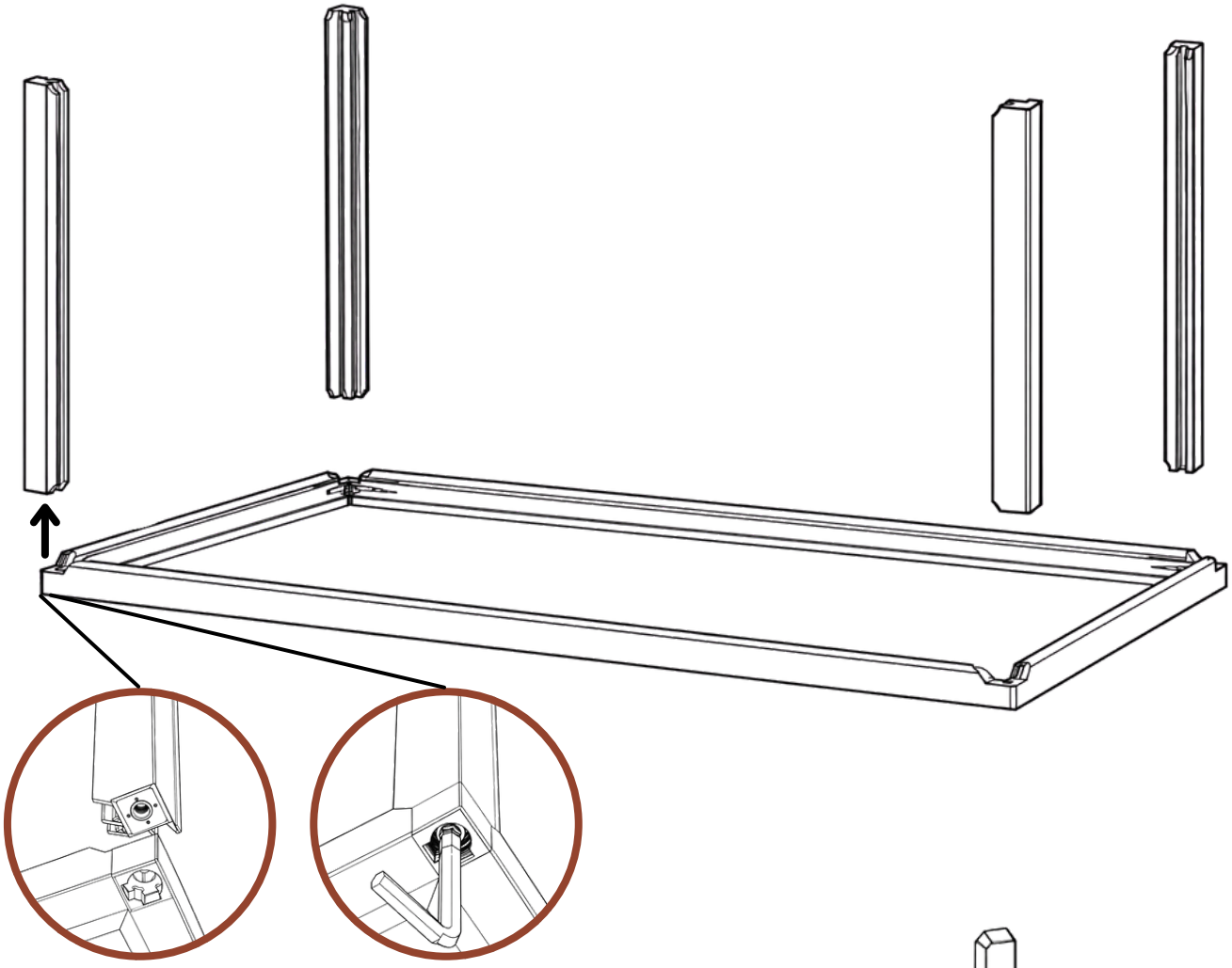

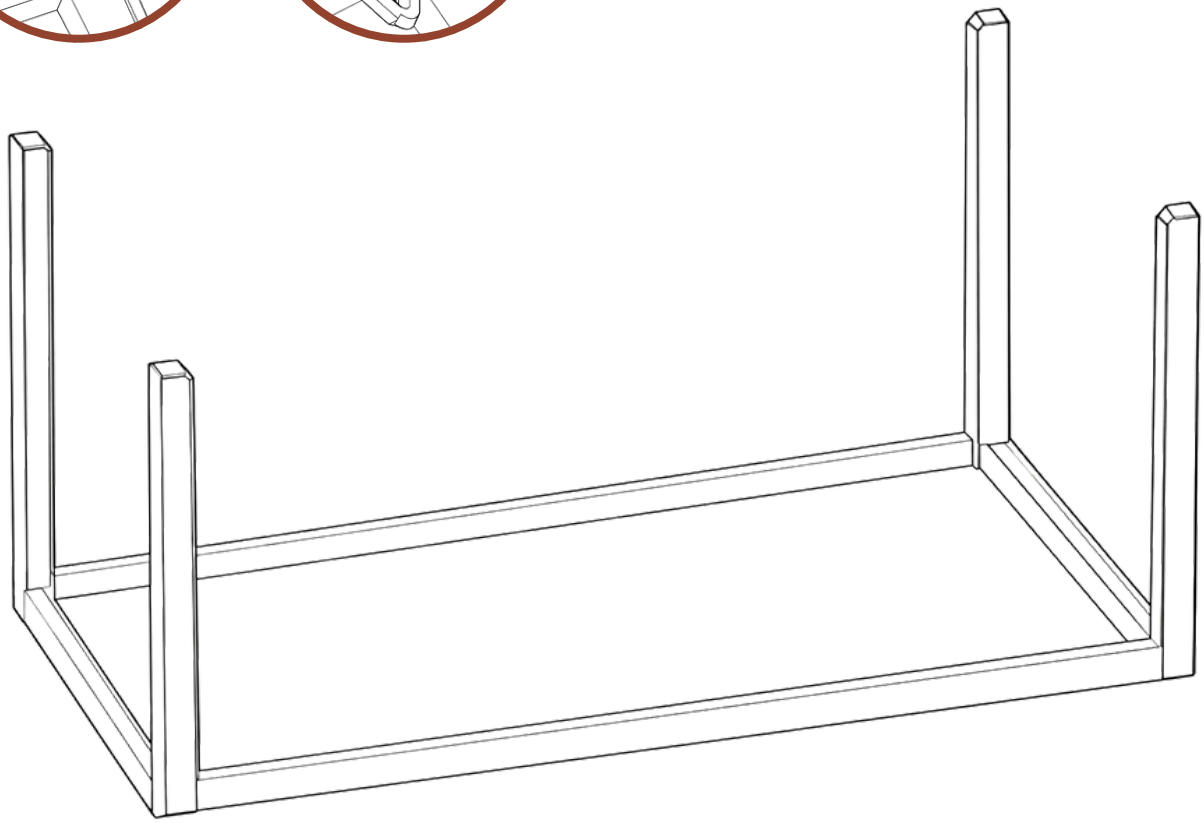

Step 2: Slide the back panel into the back frame runner making sure that the bottom of the panel is fully inserted in the bottom channel.

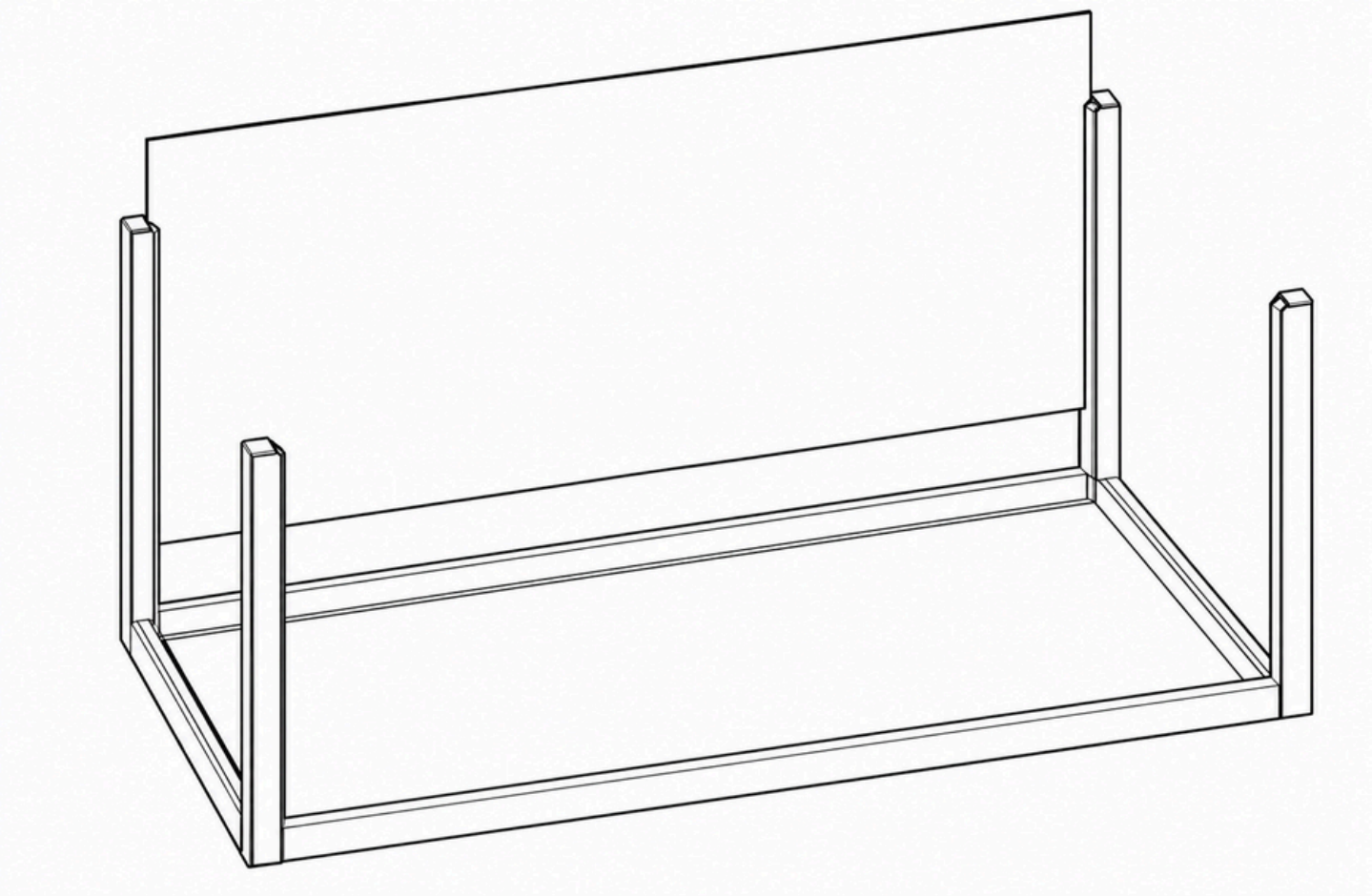

Step 3: Attach the cable outlet rim pieces to the panels by screwing the plates together on each side. Make sure that the rotating handle is facing outward when the outlet hole is closest to the back of the enclosure so you don't end up with two left or right panels.

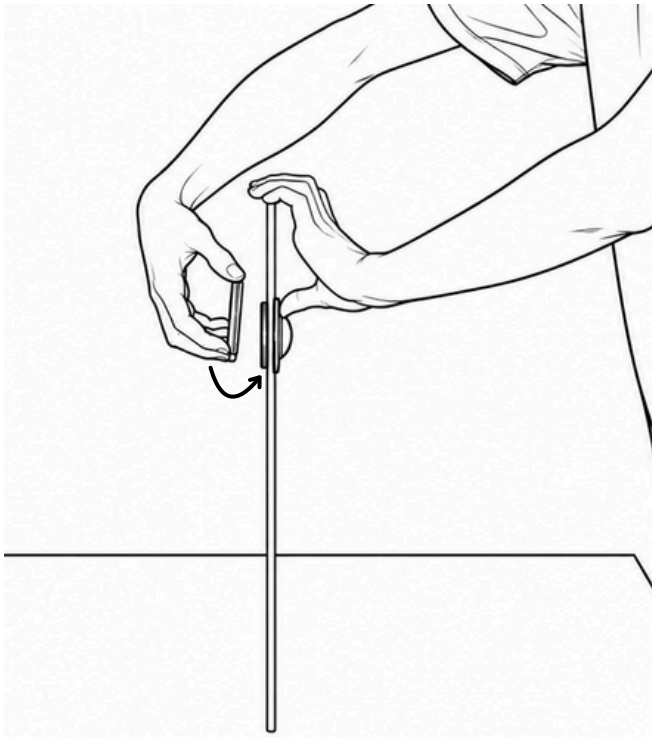

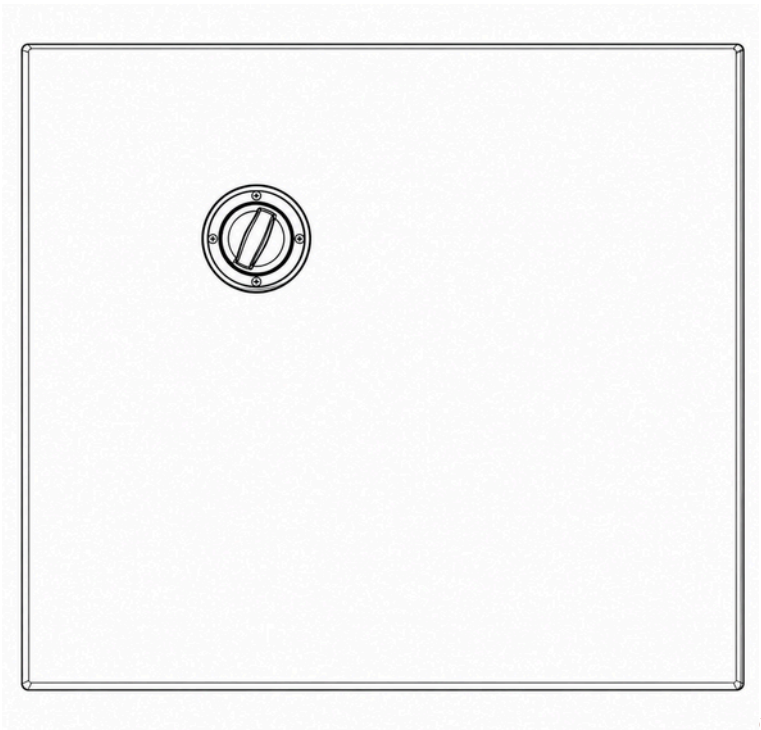

Step 4: Slide the clear side panels into the side frame runners making sure that the bottom of the panel is fully inserted into the bottom channel.

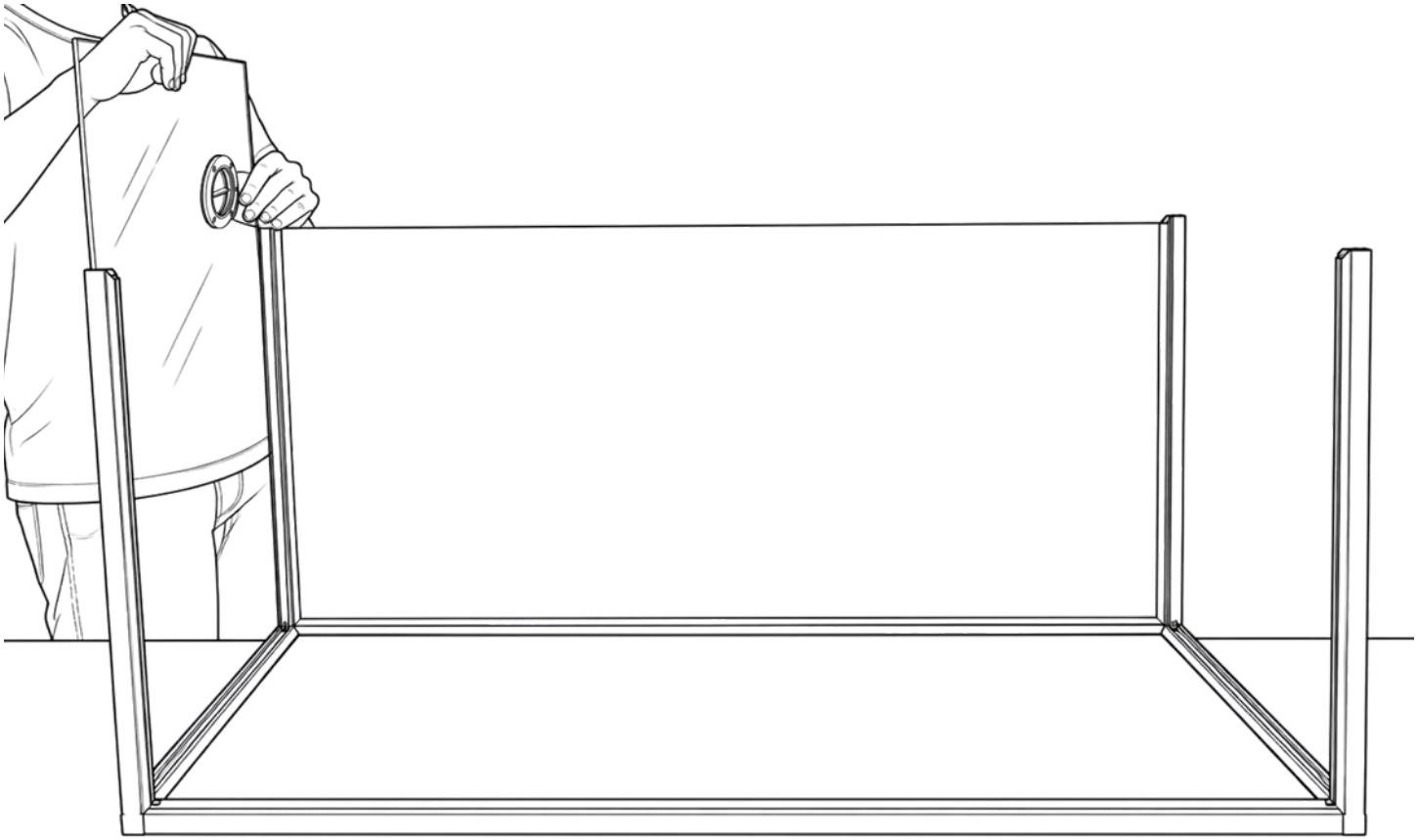



Step 5: Slide the substrate barrier into the back channel of the base runner making sure that the bottom of the barrier is fully inserted into the channel.

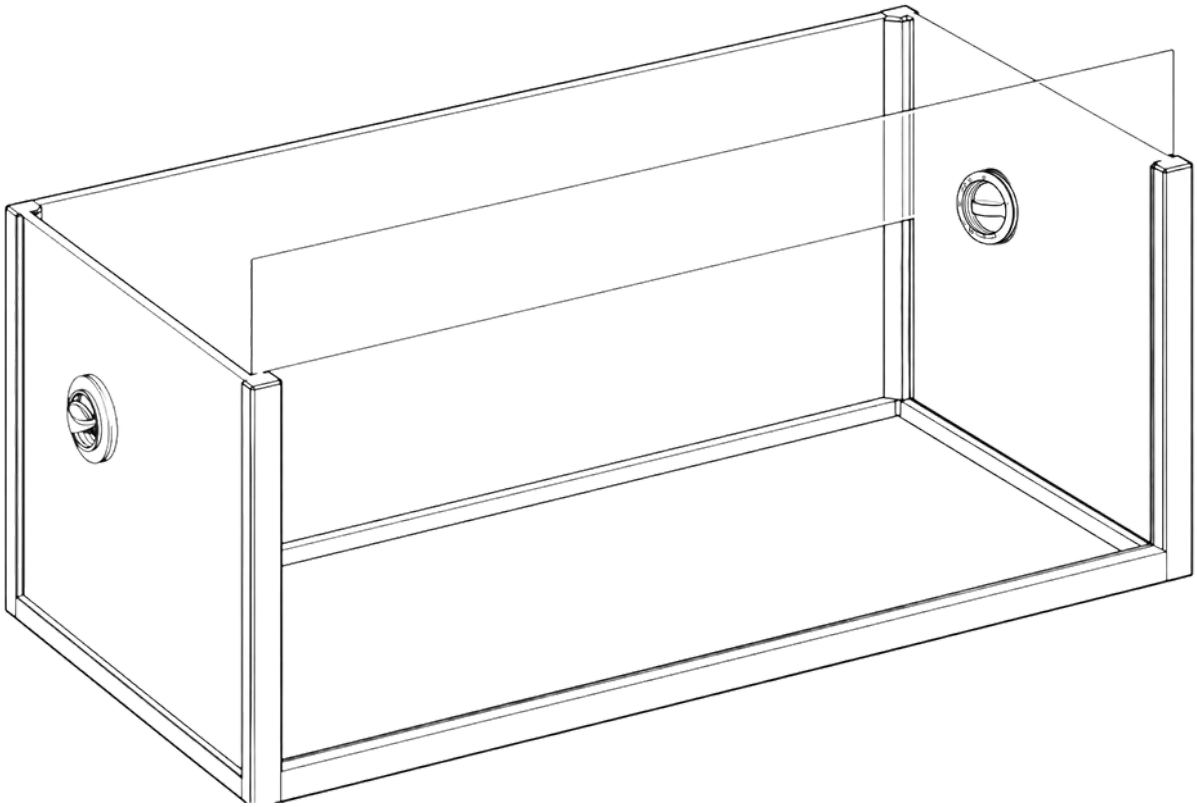

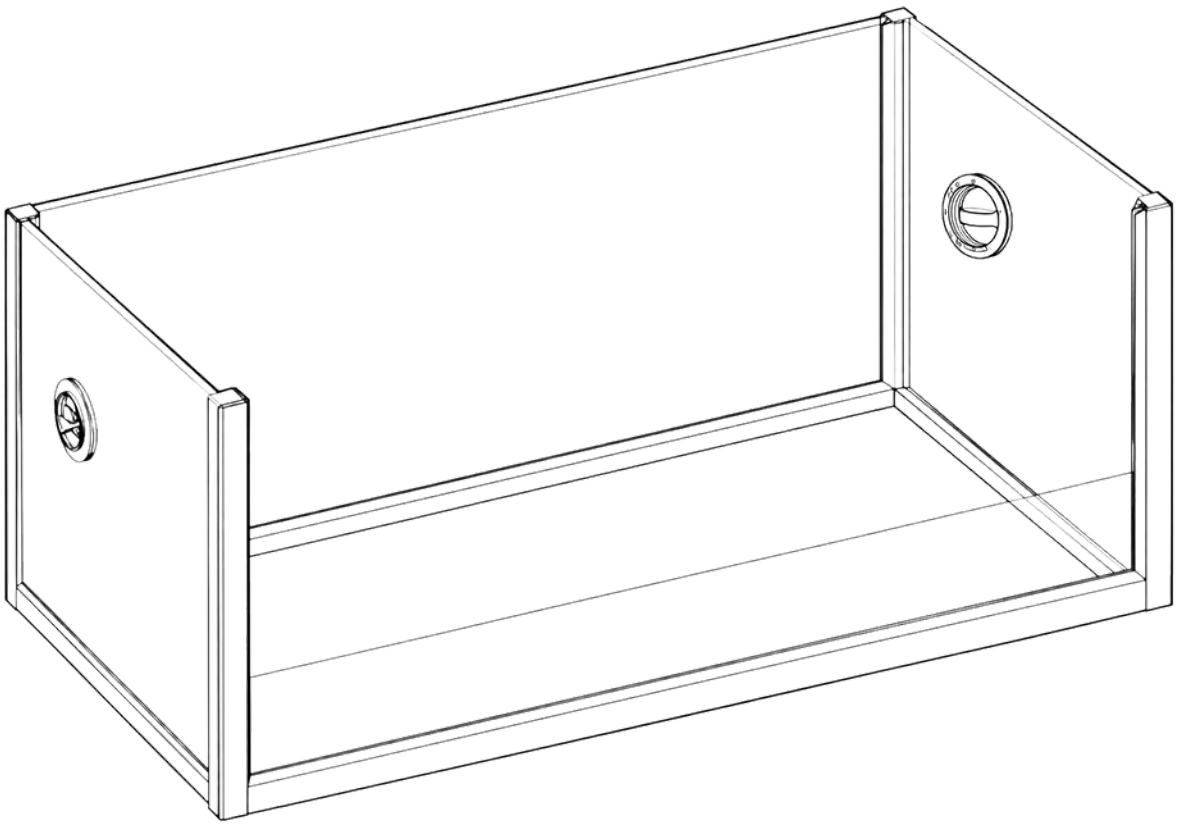

Step 6: Attach the mesh top onto the frame uprights by securing them with the M6x16 screws and tool then tighten

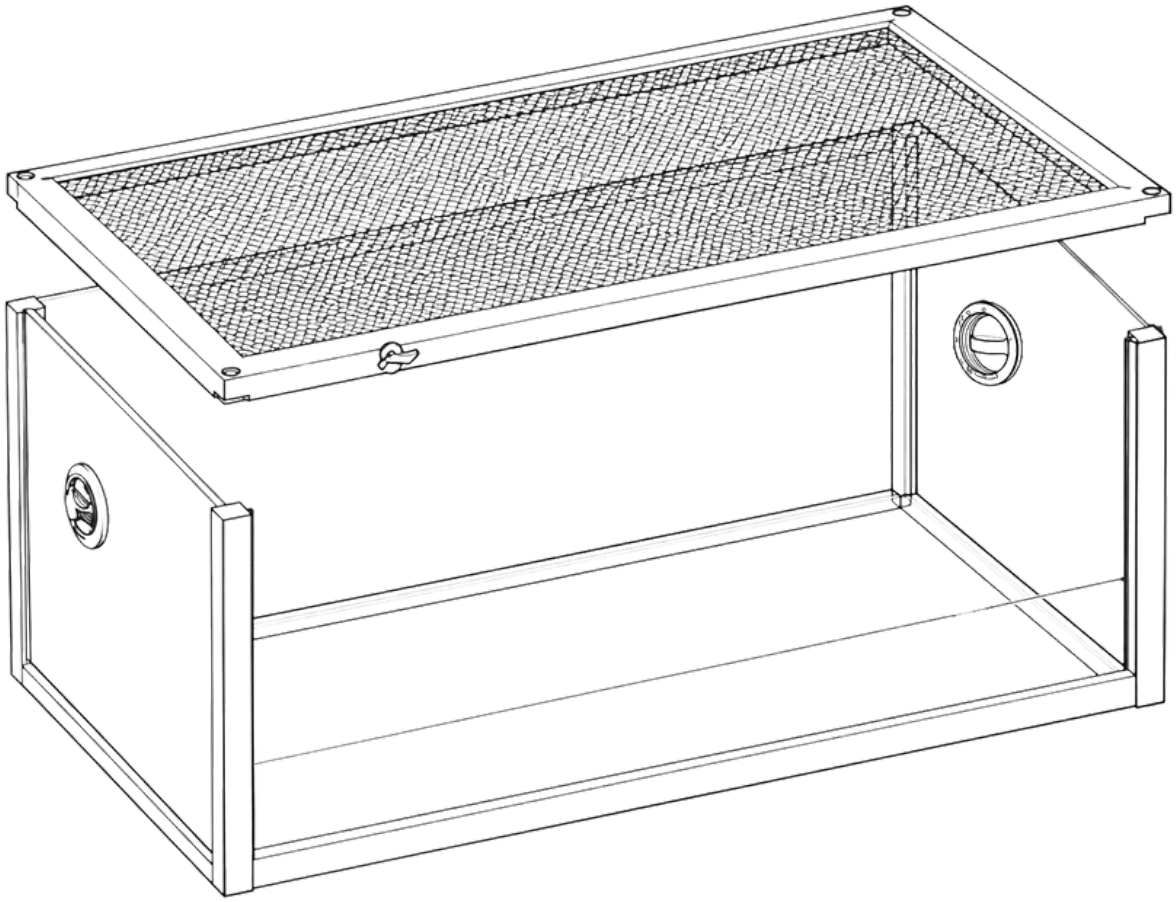

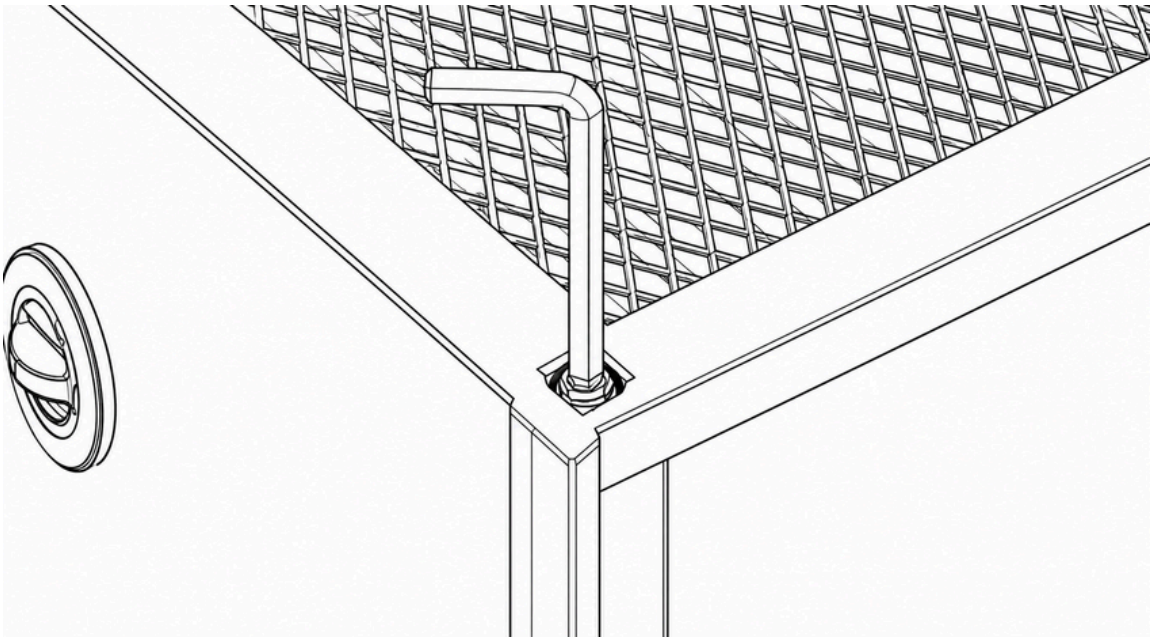

Step 7: Attach the door handles using the M4 screws, washers and tool.

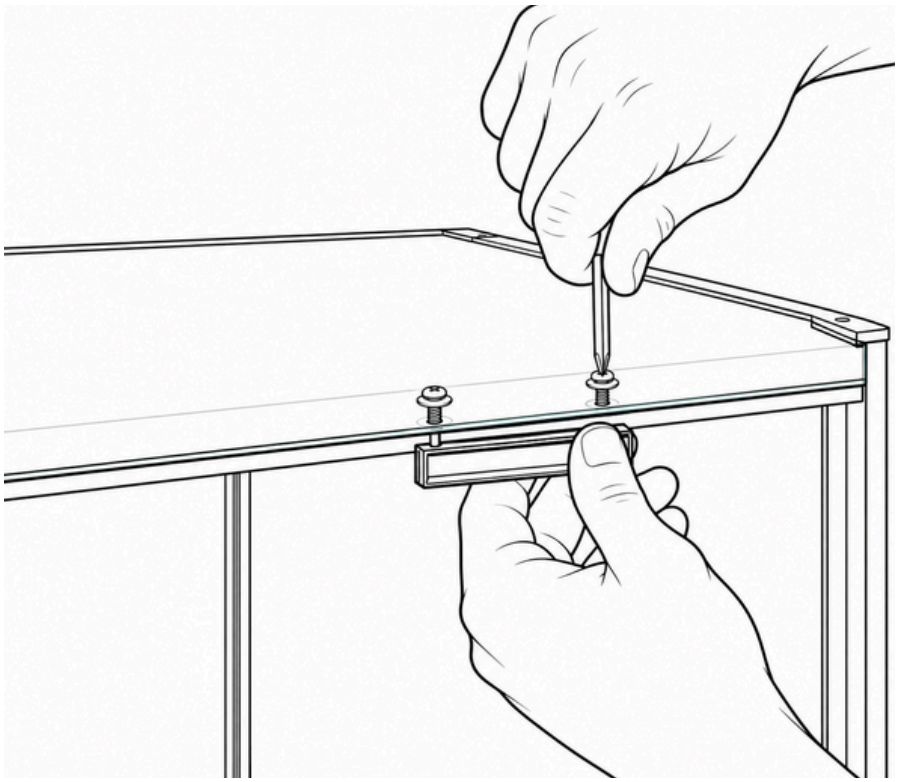

Step 8: With the handle facing outward and on the left side, tilt the door and insert it into the back runner of the mesh top and second runner of the base. Repeat for the second door with the handle on the right side inserting it into the front runner of the mesh top and the front runner of the base.

